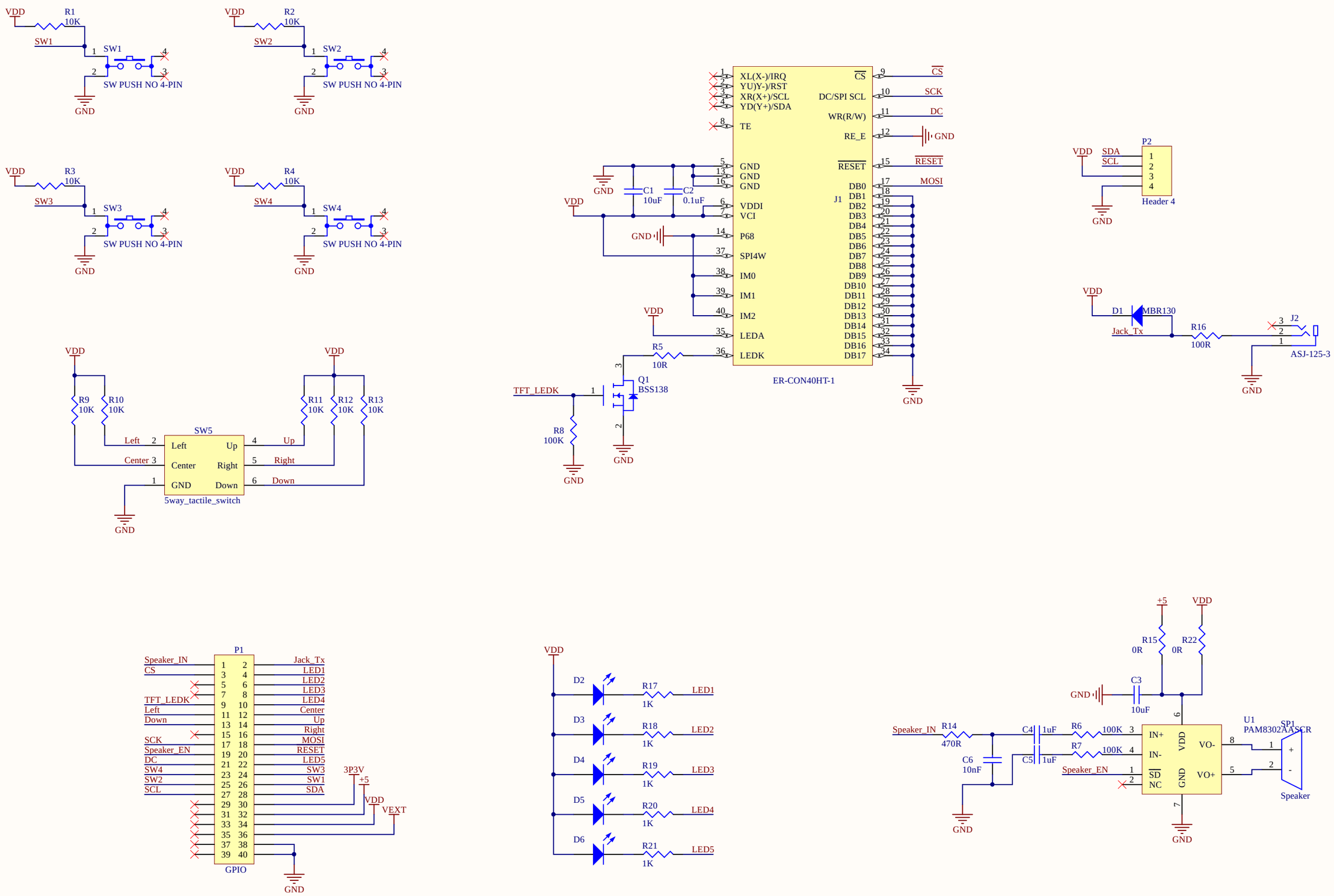

Title **AV shield for blip**		
Size: A3	Revision: 0.2	Checked by:*
Date: 8/9/2019	Time: 3:53:58 PM	Sheet 1 of 1

electronut.in
M01, Navarathna Manor
#37, Subbarama Chetty Rd
Basavanagudi, Karnataka
India-560004