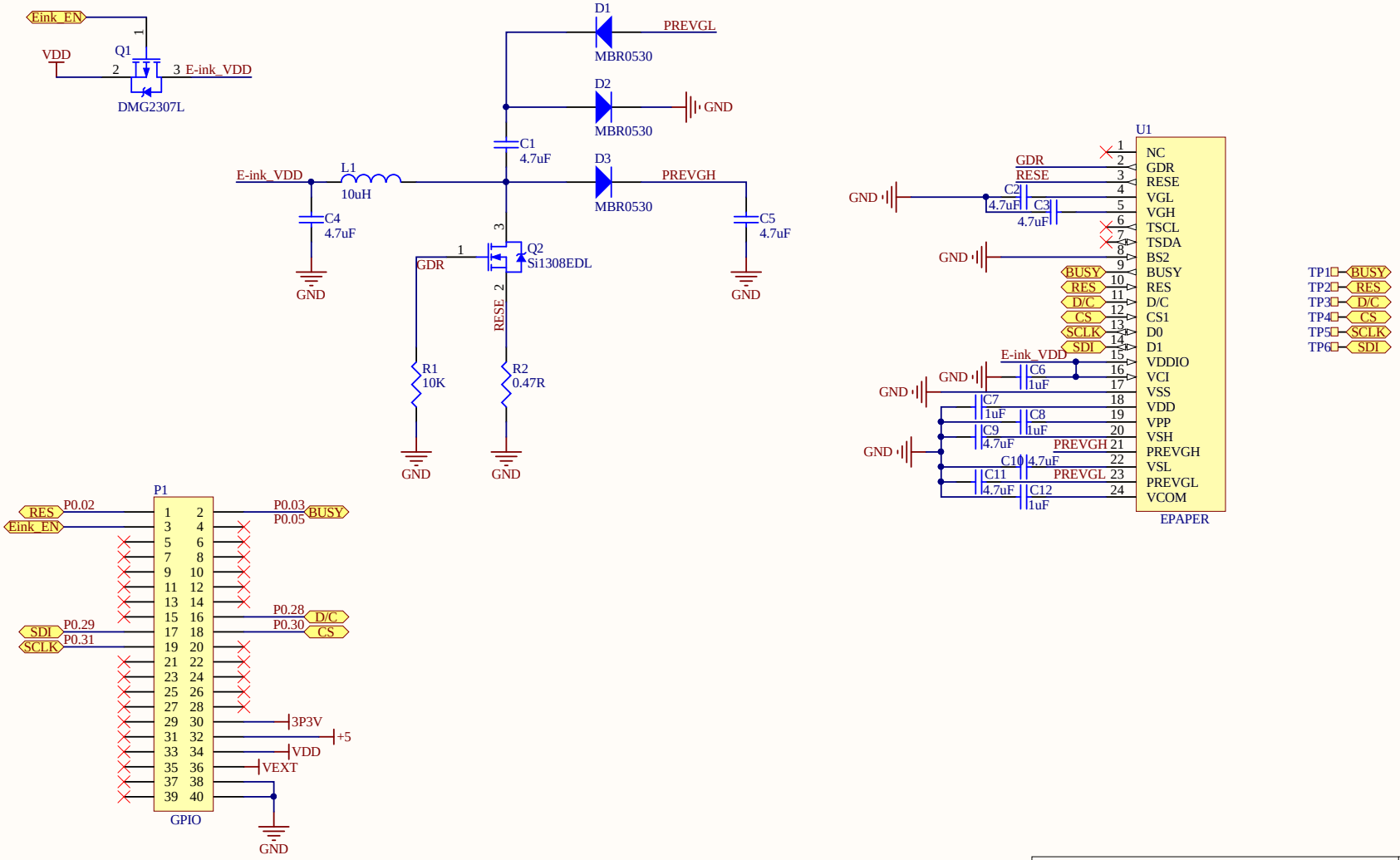

Title	*blip epaper shield*		electronut.in
Size: A4	Revision: 0.1	Approved by: *	
Date: 7/19/2019	Time: 12:25:42 PM	Sheet: 1 of 1	Drawn By: SIVAPRAKASH